MANUAL TRANSMISSION

CONTENTS

LUBRICANT 2

SEALANTS AND ADHESIVES 2

ON-VEHICLE SERVICE 2

- Transmission Oil Check 2
- Transmission Oil Change 2
- Transfer Oil Check 3
- Transfer Oil Change 3

TRANSMISSION CONTROL 4

TRANSMISSION AND TRANSFER ASSEMBLY 8

4WD INDICATOR CONTROL UNIT 10

LUBRICANT

Items	Specified lubricants	Quantity ℓ
Transmission oil	Hypoid gear oil SAE 75W – 90, 75W – 85W or 80W conforming to API GL-4	2.4
Transfer oil		2.2

SEALANTS AND ADHESIVES

Items	Specified sealant	Remarks
Contact surface between transmission and transmission control lever, thread (except outer surface) of stopper bracket assembly installation bolts and transfer control lever gasket	3M ATD Part No.8660 or equivalent	Semi-drying sealant
Thread of stopper bracket assembly installation bolts and thread of transfer control lever assembly installation bolts	3M Stud Locking No.4170 or equivalent	Anaerobic sealant

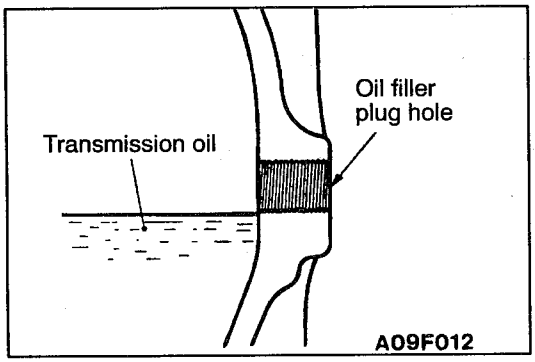

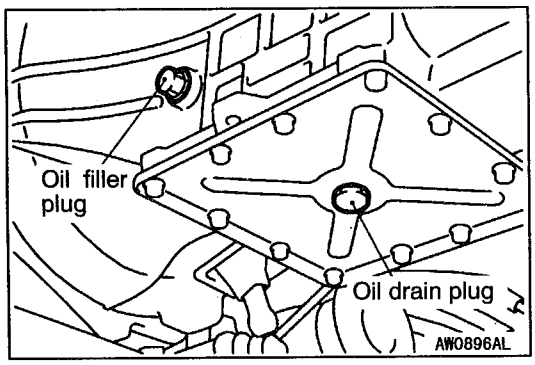

ON-VEHICLE SERVICE

TRANSMISSION OIL CHECK

1. Remove the oil filler plug.
2. Oil level should be at the lower portion of the oil filler plug hole.
3. Check that the transmission oil is not noticeably dirty, and that it has a suitable viscosity.
4. Tighten the oil filler plug to the specified torque.

   Tightening torque: 29 – 34 Nm

TRANSMISSION OIL CHANGE

1. Remove the oil drain plug to drain oil.
2. Tighten the oil drain plug to the specified torque.

   Tightening torque: 39 Nm

3. Remove the oil filler plug and fill with specified oil till the level comes to the lower portion of oil filler plug hole.

   Specified oil:
   Hypoid gear oil SAE 75W – 90, 75W – 85W or 80W conforming to API GL-4

   Quantity: 2.4 ℓ

4. Tighten the oil filler plug to the specified torque.

   Tightening torque: 29 – 34 Nm

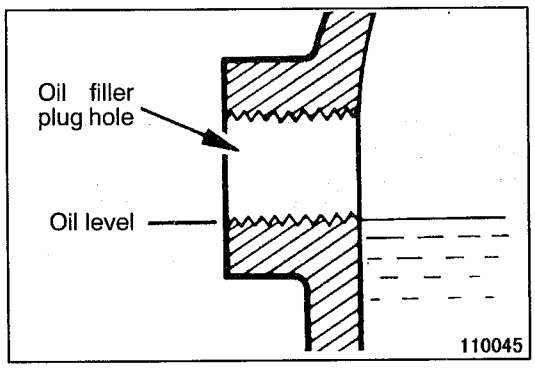

TRANSFER OIL CHECK

1. Remove the oil filler plug.
2. Oil level should be at the lower portion of the oil filler plug hole.
3. Check that the transfer oil is not noticeably dirty, and it has a suitable viscosity.
4. Install the oil filler plug, and then tighten it to the specified torque.

   Tightening torque: 29 -34 Nm

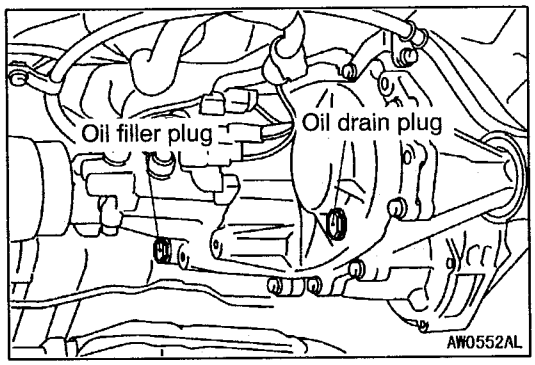

TRANSFER OIL CHANGE

1. Remove the oil drain plug to drain oil.
2. Install the oil drain plug, and then tighten it to the specified torque.

   Tightening torque: 29 -34 Nm

3. Remove the oil filler plug, and then fill with specified oil till the level comes to the lower portion of oil filler plug hole.

   Specified oil:
   Hypoid gear oil SAE 75W - 90, 75W - 85W or 80W conforming to API GL-4

   Quantity: 2.2 ℓ

4. Install the oil filler plug, and then tighten it to the specified torque.

   Specified torque: 29 - 34 Nm

TRANSMISSION CONTROL

REMOVAL AND INSTALLATION

Pre-removal Operation
Move the transmission control lever and transfer control lever to the following positions.
- Transmission control lever: Neutral
- Transfer control lever: 4H

Post-installation Operation
Check that the transmission control lever and the transfer control lever are moved to each position smoothly and correctly.

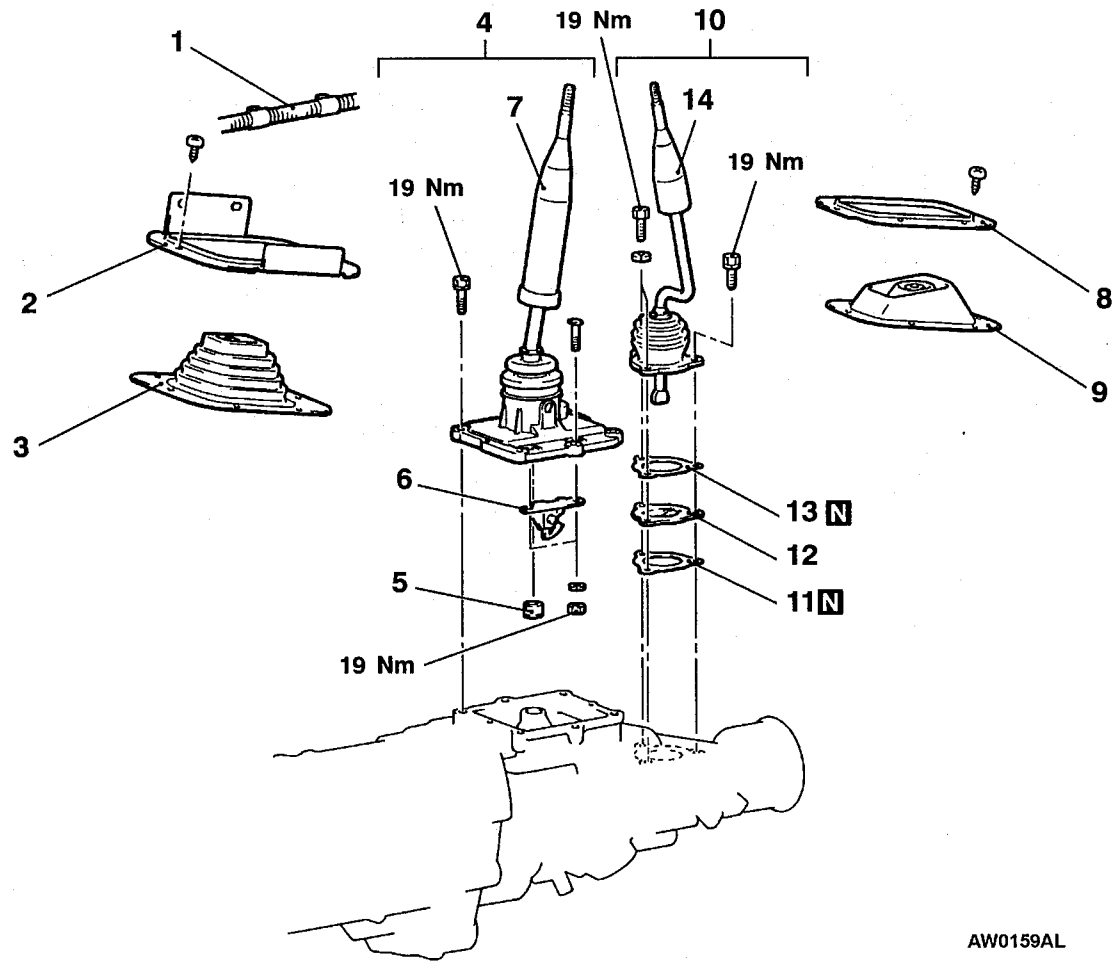

Transmission control lever assembly removal steps
- Front floor console and rear floor console (Refer to GROUP 52A.)

1. Harness connection
2. Retainer
3. Shift lever cover
◀A▶ 4. Transmission control lever assembly
5. Control lever bushing
▶C◀ 6. Stopper bracket assembly
7. Transmission control lever

Transfer control lever assembly removal steps
- Rear floor console (Refer to GROUP 52A.)

8. Retainer
9. Transfer lever inner boots
▶B◀ 10. Transfer control lever assembly
11. Gasket
▶A◀ 12. Stopper plate
13. Gasket
14. Transfer control lever

SEALANT APPLICATION POINTS

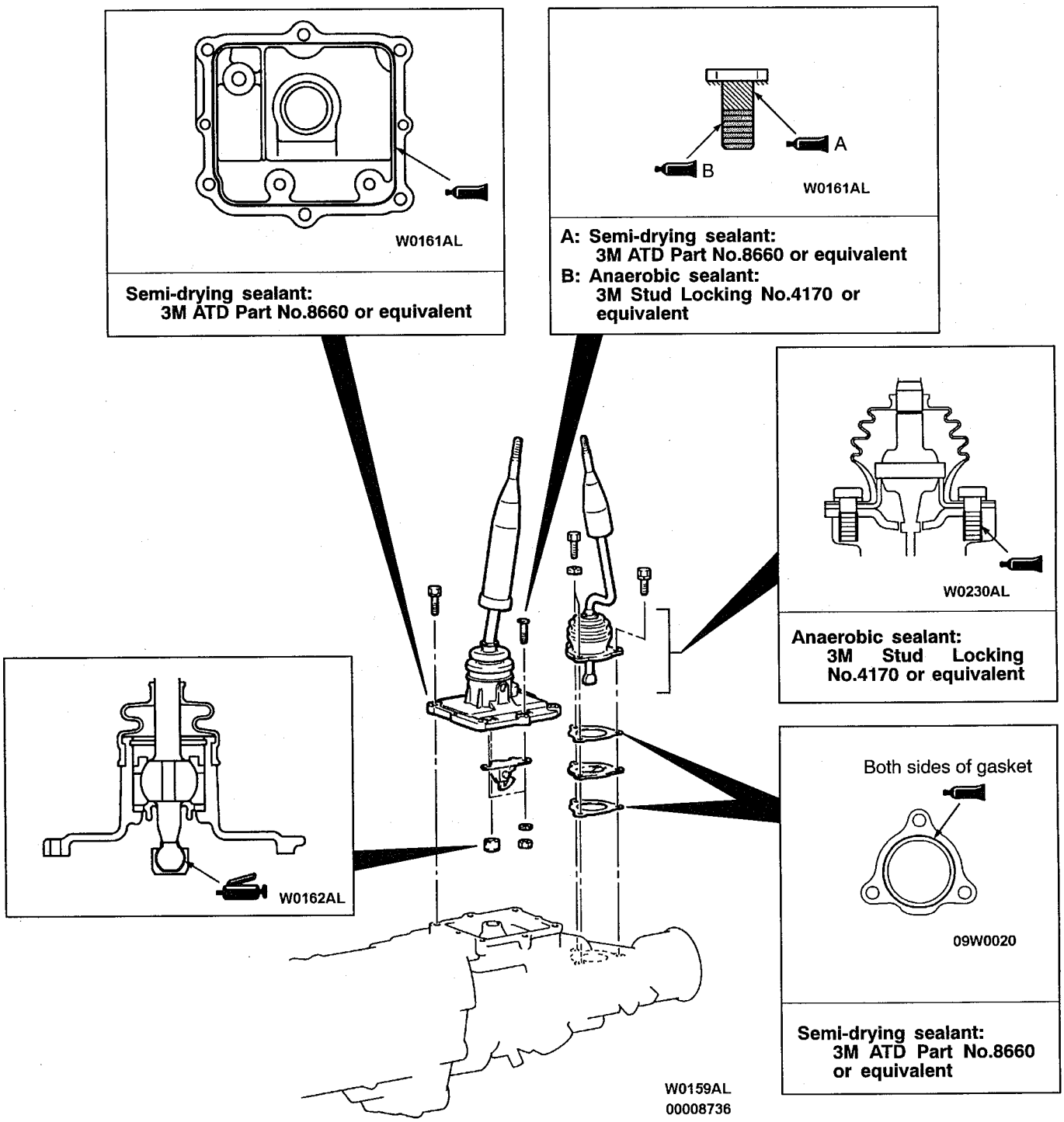

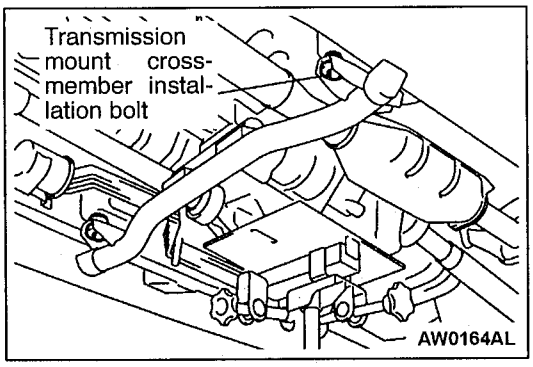

REMOVAL SERVICE POINT

◀A▶ TRANSMISSION CONTROL LEVER ASSEMBLY REMOVAL

1. Support the transfer with a transmission jack, and then remove the transmission mount crossmember installation bolt.
2. Lower the transmission until the transmission control lever assembly installation bolts can be removed.
3. Remove the bolts, and then remove the transmission control lever assembly.

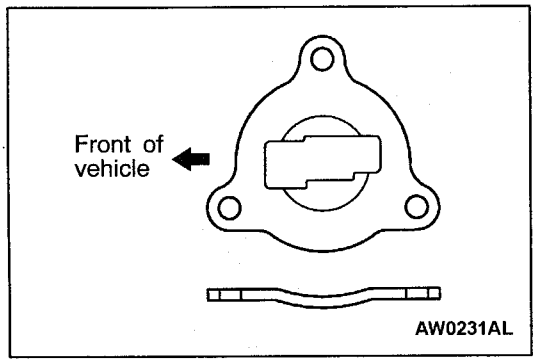

INSTALLATION SERVICE POINTS

▶A◀ STOPPER PLATE INSTALLATION

Install the stopper plate as shown in the illustration.

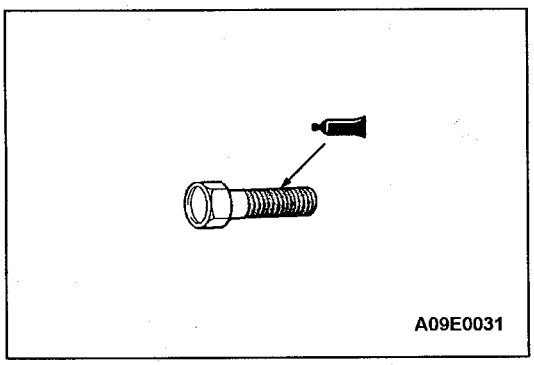

▶B◀ TRANSFER CONTROL LEVER ASSEMBLY INSTALLATION

1. Eliminate adhered to the transfer control lever assembly installation bolts.
2. Use a tap (M8 × 1.25) to eliminate adhesive adhered to the threaded holes of the control housing, and then clean the holes with a compressed air.
3. Apply the specified adhesive to the transfer control lever assembly installation bolts, and then install the transfer control lever assembly.

Specified adhesive: Anaerobic sealant, 3M Stud Locking No.4170 or equivalent

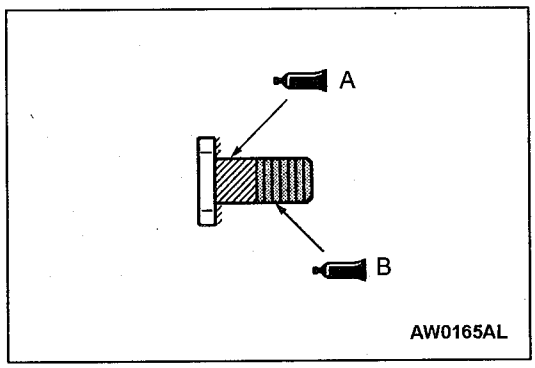

▶C◀ STOPPER BRACKET ASSEMBLY INSTALLATION

1. Eliminate sealant and adhesive adhered to the stopper bracket assembly installation bolts.
2. Use a tap (M8 × 1.25) to eliminate adhesive adhered to the threaded holes of the stopper bracket assembly installation nuts, and then clean the holes with a compressed air.
3. Apply the specified sealant to the stopper bracket assembly installation bolts (A shown in the illustration) and the specified adhesive to the threaded part of the stopper bracket assembly installation bolts (B shown in the illustration), and then install the stopper bracket assembly.

   Specified sealant (A): Semi-drying sealant, 3M ATD Part No.8660 or equivalent

   Specified adhesive (B): Anaerobic sealant, 3M Stud Locking No.4170 or equivalent

TRANSMISSION AND TRANSFER ASSEMBLY

REMOVAL AND INSTALLATION

Pre-removal and Post-installation Operation
- Transmission Oil and Transfer Oil Draining and Refilling (Refer to P.22-2, 3.)
- Transmission Control Lever Assembly and Transfer Control Lever Assembly Removal and Installation (Refer to P.22-4.)
- Front Propeller Shaft and Rear Propeller Shaft Removal and Installation (Refer to GROUP 25.)
- Front Exhaust Pipe and Catalytic Converter Removal and Installation (Refer to GROUP 17 – Emission Control.)
- Shift Lever Operation Check <only after installation>
- Instruments Operation Check <only after installation>

<MPI>

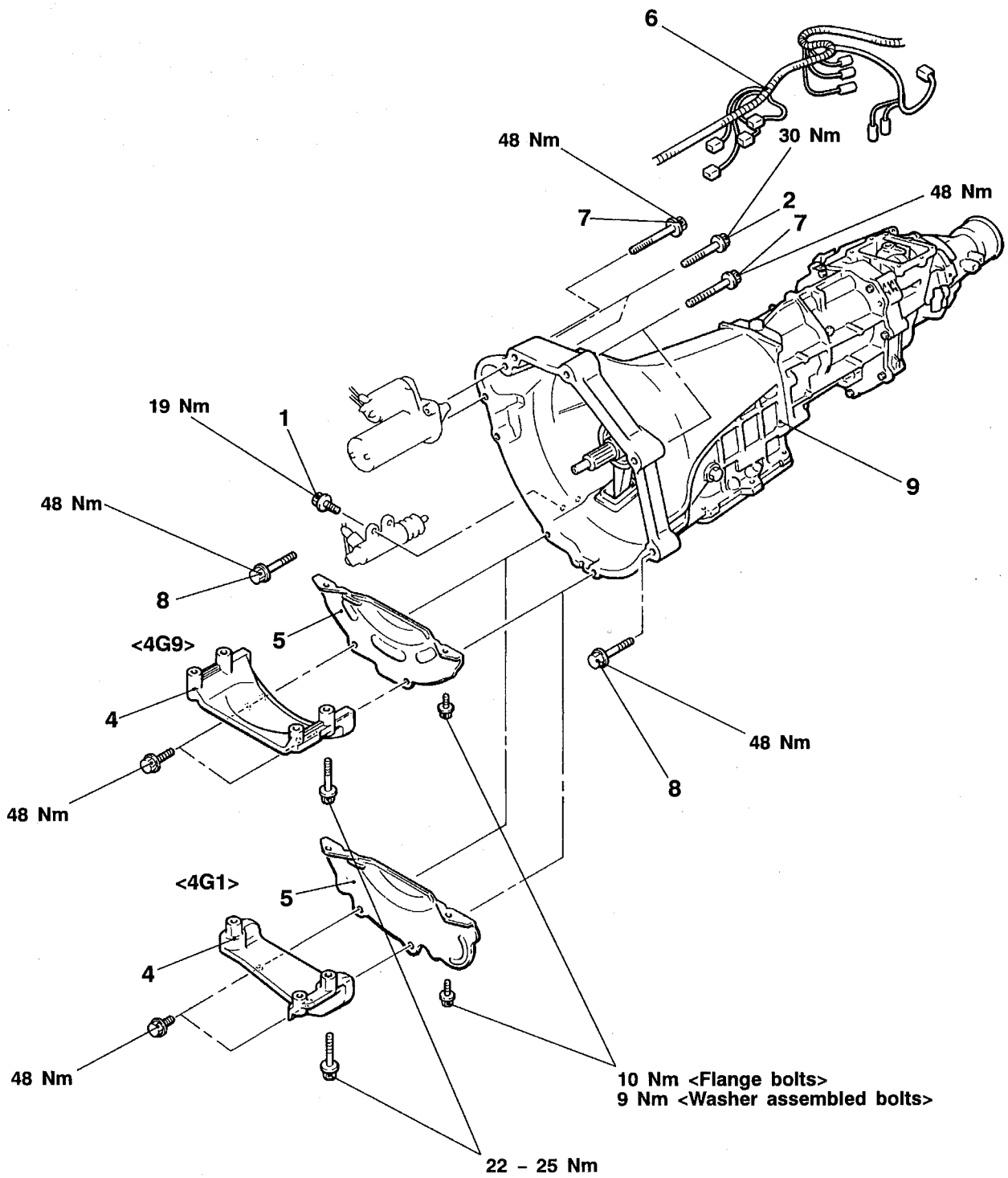

AW1240AL

<GDI>

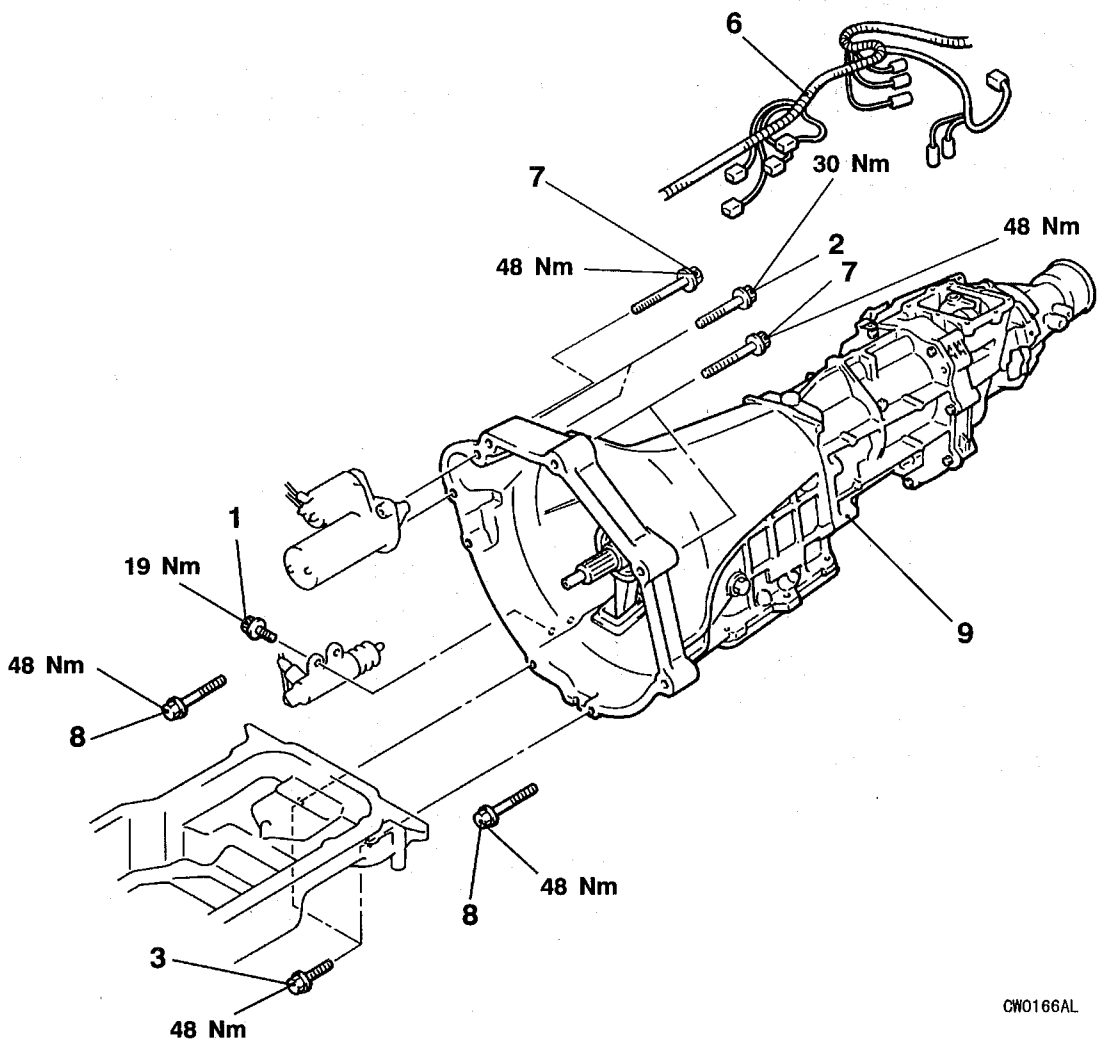

Removal steps

1. Clutch release cylinder installation bolts
2. Starter motor installation bolts
3. Oil pan connection bolts <GDI>
4. Transmission stay <MPI>
5. Bell housing cover <MPI>
- Adapter (Refer to GROUP 32 - Transmission mount.)
6. Transmission harness connector connection
7. Transmission assembly upper coupling bolts
8. Transmission assembly lower coupling bolts
9. Transmission and transfer assembly

4WD INDICATOR CONTROL UNIT

REMOVAL AND INSTALLATION

Pre-removal and Post-installation Operation
- Seat Assembly (Driver's side) and Rear Seat Cushion Removal and Installation (Refer to GROUP 52A – Seat.)
- Front Scuff Plate (Right) and Quarter Trim (Right) Removal and Installation (Refer to GROUP 52A – Trims.)
- Front Floor Console and Rear Floor Console Removal and Installation (Refer to GROUP 52A.)

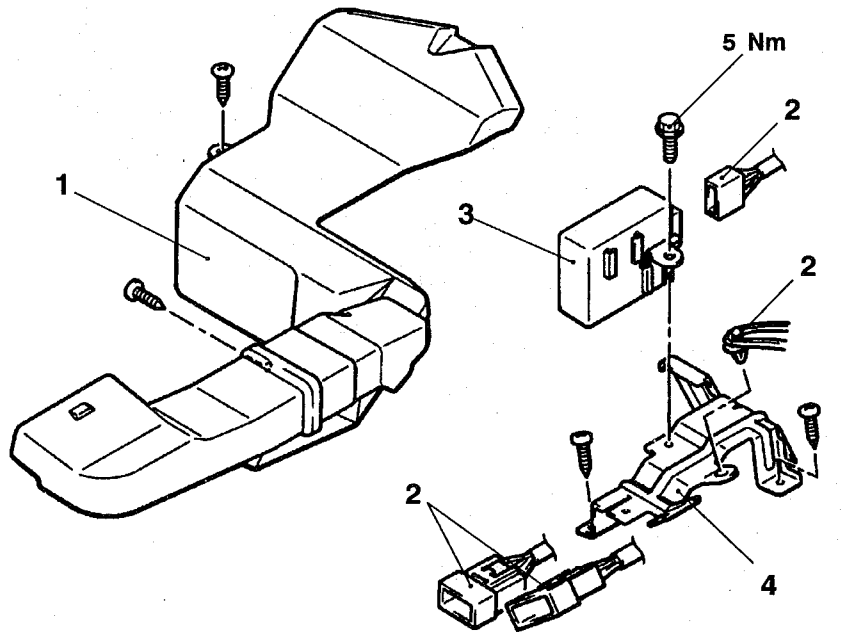

AW1241AL

Removal steps
1. Rear heater duct (right)
   - Turn up the carpet.
2. Harness connector connection
3. 4WD indicator control unit
4. Bracket

INSPECTION

4WD INDICATOR CONTROL UNIT CHECK

Measure terminal voltage on each condition. Connect the harness to the control unit. Insert the probe from the back side of the connector and measure the voltage between the terminal No.8 (earth terminal) and each terminal.

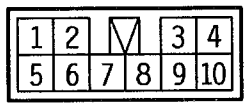

W0167AL

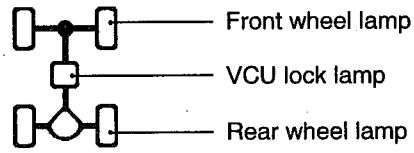

W0169AL
00008765

Terminal No.	Check item		Check condition 1: Ignition switch	Check condition 2: Transfer lever position	Normal condition
1	High/Low detection switch		ON	Move from $4HL_C$ to $4LL_C$ or vice versa	System voltage*
				$4HL_C$, $4LL_C$	0 V
2	4WD operation detection switch		ON	2H	System voltage*
				4H	0 V
3	Ignition switch		OFF	–	0 V
			ON	–	System voltage
4	4WD indicator lamp	VCU lock lamp	ON	4H	System voltage
				$4HL_C$	1.5 V or lower
5	VCU lock detection switch		ON	4H	System voltage*
				$4HL_C$	0 V
6	Free wheel engage switch		ON	2WD condition	System voltage*
				4WD condition	0 V
7	VCU lock operation detection switch		ON	4H	System voltage*
				$4HL_C$	0 V
9	4WD indicator lamp	Rear wheel	ON	Move from $4HL_C$ to $4LL_C$ or vice versa	0 V
				$4HL_C$, $4LL_C$	System voltage*
10	4WD indicator lamp	Front wheel	ON	2WD condition	0 V
				4WD condition	System voltage*

NOTE
System voltage marked with * is low slightly (from 1 V to 2 V).

NOTES